CLWG

Linear Potentiometer

Absolute Linear Position to 30 inches (750 mm)
3K - 10K ohms • High Cycle Applications
Industrial Automation, Test and Robotics Applications
IP65 Protection • M12 Connector

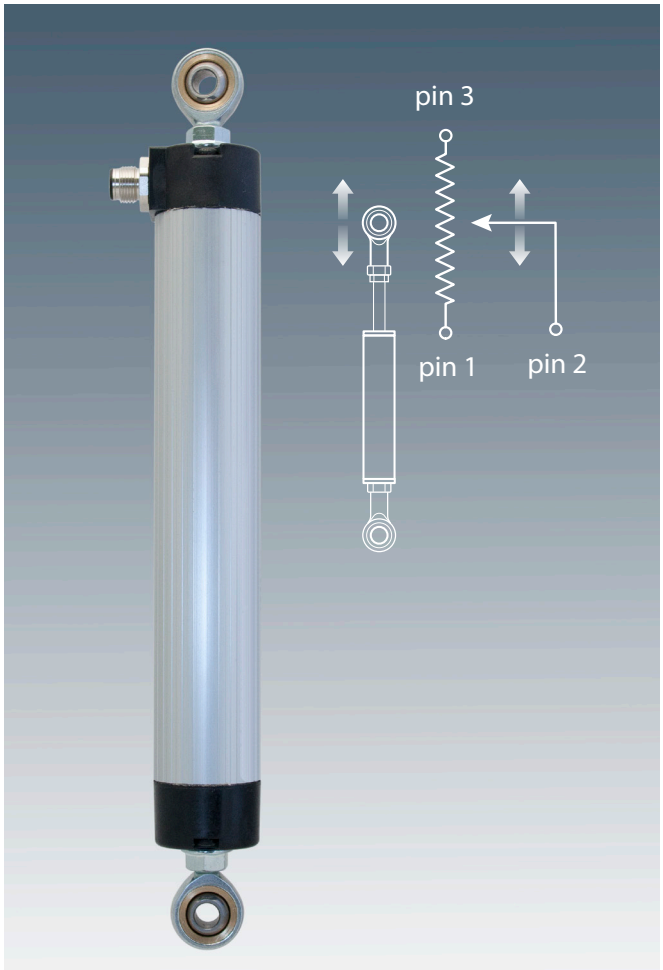

GENERAL	
Full Stroke Ranges	0-3 to 0-30 in. (0-75 to 0-750 mm)
Output Signal	voltage divider (potentiometer)
Linearity	see ordering information
Repeatability	< 0.01 mm
Resolution	essentially infinite
Life Expectancy	50 million cycles
Enclosure Material	aluminum
Sensor	conductive plastic linear potentiometer
Operating Speed	200 inches (5 M) per second, max.

ELECTRICAL	
Input Resistance	5K to 10K ohms (±20%), see ordercode
Recommended Maximum Input Voltage	25-30 V(AC or DC)
Recommended Operating Wiper Current	≤ 1 µA

ENVIRONMENTAL	
Enclosure Design	IP65
Operating Temperature	-22° to 212°F
Vibration	up to 10 g to 2000 Hz maximum

Developed specifically for a wide range of demanding applications, our CL series position transducers offer unrivalled performance in terms of accuracy, repeatability, life expectancy and ease of mounting. Such applications include industrial automation, automotive and robotics.

The CLWG uses a twin-bearing actuating rod, backlash-free pivot heads and a superior wiper system to provide outstanding linearity and performance.

北京哲尔斯科技有限公司
GRS
技术服务部
TEL: 01085600010
www.grstech.com
QQ: 328193094

Ordering Information:

Model Number:

CLWG - _____ - _____
order code: Ⓡ Ⓐ

Sample Model Number:
CLWG - 75 - NC4
Ⓡ range: 3 inches [75 mm]
Ⓐ electrical connection: 4-pin, 90° M12 cordset

Full Stroke Range:

Ⓡ order code:	75	100	150	225	300	360	450	500	600	750
measurement range, in. [mm]:	3[75]	4[100]	6[150]	9[225]	12[300]	14[360]	18[450]	20[500]	24[600]	30[750]
resistance, (±20%):	3K	3K	5K	5K	5K	5K	5K	5K	5K	10K
linearity, %:	0.1%	0.1%	0.08%	0.07%	0.06%	0.05%	0.05%	0.05%	0.05%	0.04%

20630 Plummer Street • Chatsworth, CA 91311
tel: 800.423.5483 • +1.818.701.2750 • fax: +1.818.701.2799
measurement SPECIALTIES™
celesco
celesco.com • info@celesco.com

Ordering Information (cont.):

Electrical Connection:

Ⓐ order code:

blank	MC4	SC4	NC4
4-pin M12 connector *(no mating plug supplied)*	4-pin M12 connector w/ mating plug	4-pin M12 connector and 4 meter length cordset w/straight mating plug	4-pin M12 connector and 4 meter length cordset w/90° mating plug

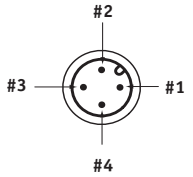

male receptacle (contact view)

0.13" - 0.20" OD Cable (4mm - 6mm)

4-conductor 22 AWG

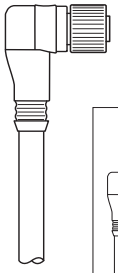

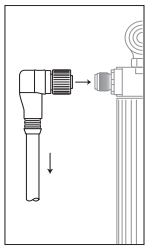

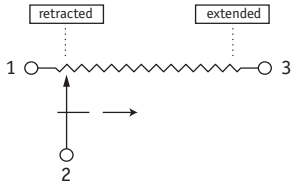

Pin#	Cordset Wire Color
1	BROWN
2	WHITE
3	BLUE
4	BLACK

Outline Drawing

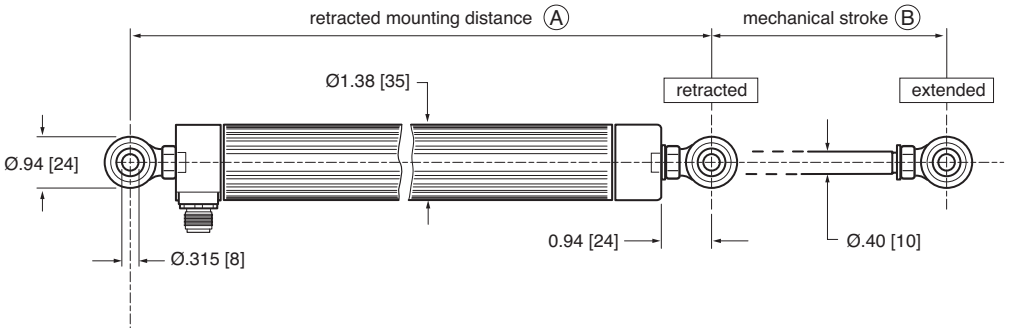

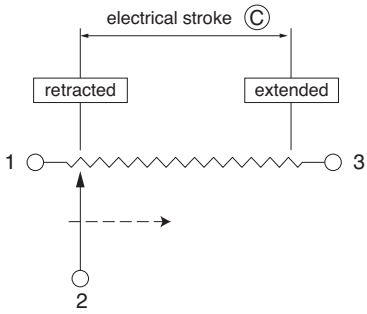

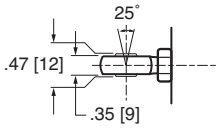

All DIMENSIONS ARE IN INCHES [MM]

Measurement Range	3	4	6	9	12	14	18	20	24	30	in
	75	100	150	225	300	360	450	500	600	750	mm
Ⓐ	9.72	10.75	12.72	15.75	18.74	21.69	26.18	28.74	33.70	40.94	in
	247	273	323	400	476	551	665	730	856	1040	mm
Ⓑ	3.11	4.13	6.10	9.09	12.09	14.49	18.11	20.08	24.09	30.07 ± 0.02	in
	79	105	155	231	307	368	460	510	612	764 ± 2	mm
Ⓒ	2.99	4.01	5.98	8.98	11.97	14.41	17.99	20.00	24.02	30.00	in
	76	102	152	228	304	366	457	508	610	762	mm

北京吉尔斯科技有限公司
GRS
技术服务部
www.grs-tech.com
TEL: 010-85800010
QQ: 328193094